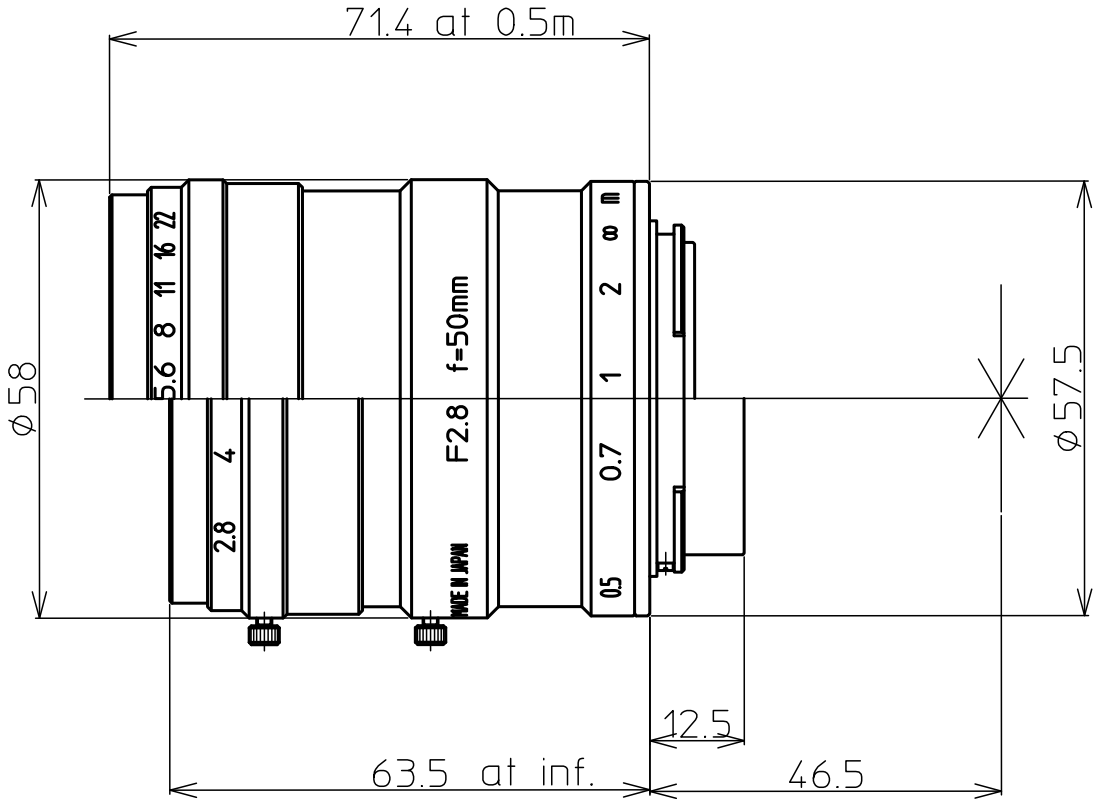

COLOR 3CCD LINE SENSER LENS	
FOCAL LENGTH	f=50.0mm
MAX. DIAMETER (RATIO)	F:2.8
IRIS RANGE	F2.8~F16
SENSOR SIZE	30mm
MINIMUM FOCUS DISTANCE	0.5m
FLANGE BACK	46.5 mm in air
FILTER SCREW SIZE	M52×0.75
FRONT/REAR EFFECTIVE DIA.	φ36.8 φ38.6
MOUNT	Nikon F Mount
WEIGHT	358g

Kowa

LM50CLS

50mm / F2.8